10 Blockly - Handshaking - Dobot to VEX

NAME: _____ *Date:* _____ *Section:* _____

INTRODUCTION

Often robotic arms need to communicate with other devices or controllers in a work cell, or factory. This is called *HANDSHAKING* and can be done between different machines, devices and robots. It is a very simple form of communication and is done with simple ones and zeros; or "ons" and "offs".

In this activity you will use all of the knowledge learned in previous activities including activity seven and eight to make a Dobot Magician Robot communicate with a VEX cortex.

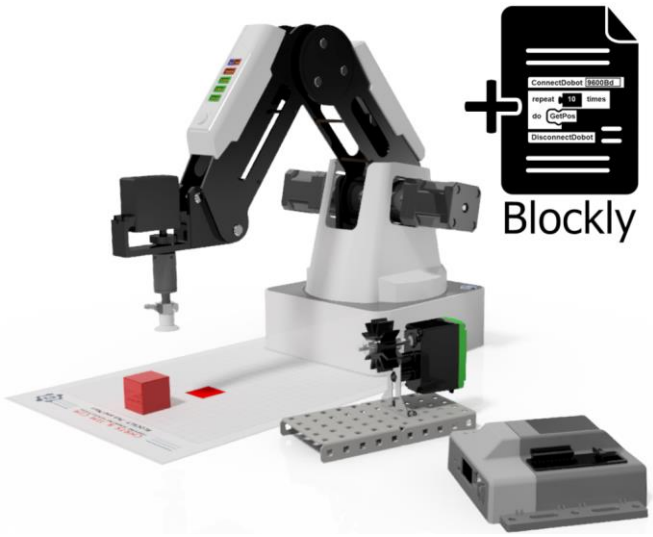

Caution: NEVER wire anything to the Dobot Magician while it has power on. ALWAYS shutdown the Dobot before making connections or damage to the robot could occur.

KEY VOCABULARY

- Inputs and Outputs
- Variables
- Function / Voids
- Handshaking

EQUIPMENT & SUPPLIES

- Dobot Magician
- 1" cylinders or cubes
- Suction Cup Gripper
- Various VEX parts for grinding station
- VEX Cortex
- Simple VEX Grinding Station
- Handshake Modules

PROCEDURE

Caution: NEVER wire anything to the Dobot Magician while it has power on. ALWAYS turn it off before making connections or damage to the robot could occur. Be sure to ask your instructor if you have any questions.

1. Set up ***Robot*** with a suction cup - ***GP1 & SW1***
2. Wire ***Robot*** with an ***OUTPUT*** signal ***GP2 - EIO13***.
3. Wire ***Robot*** with an ***INPUT*** signal ***GP5 - EIO5.***
4. Wire the ***Microcontroller*** Digital Output (sendSig) to *dgtl1* and the Touch (receiveSig) to *dgtl2*
5. Wire both the ***Robot*** and the ***Microcontroller*** to the handshake modules as shown on the next pages.

Order of operations

ROBOT

- Move - Home
- Move - ABPick
- Move - ATPick
- Pick Up Cube
- Jump - ATMachine
- Send ***OUTPUT*** signal to VEX
- Wait for ***INPUT*** Signal
- Jump- ATPick
- Release Cube
- Move - ABPick
- Move - Home

VEX - Microcontroller

- Wait for ***INPUT*** Signal
- Turn on Grinding Station
- Run the station for 3 seconds
- Send ***OUTPUT*** signal to Dobot

Open up Blockly in the software

When you re-open this program check that the name of the file on top matches the code in the file, if it does not, you may end up overwriting another program

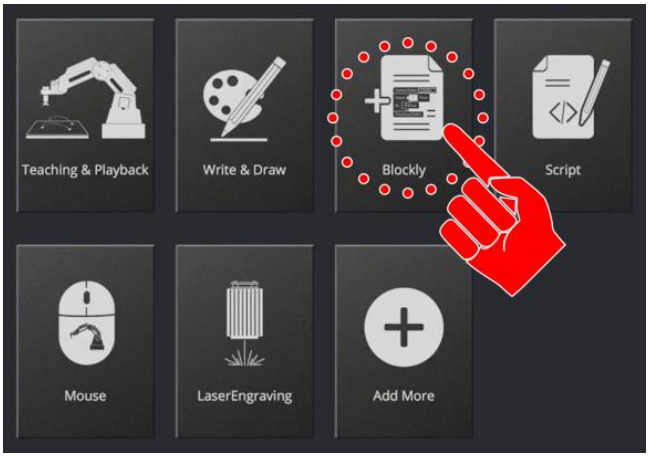

Dobot Setup

SEND Output

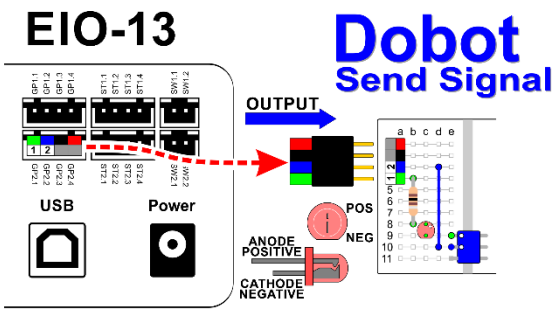

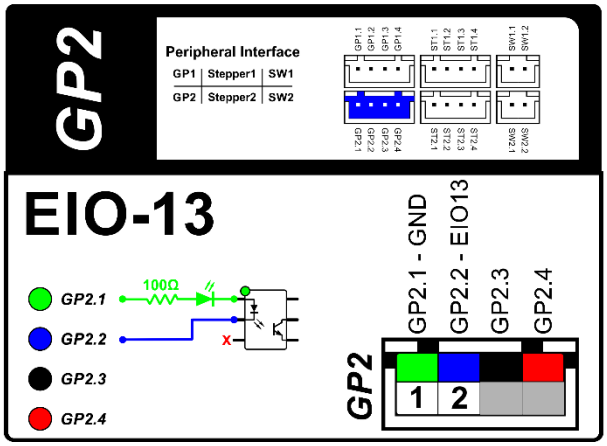

RECEIVE Input

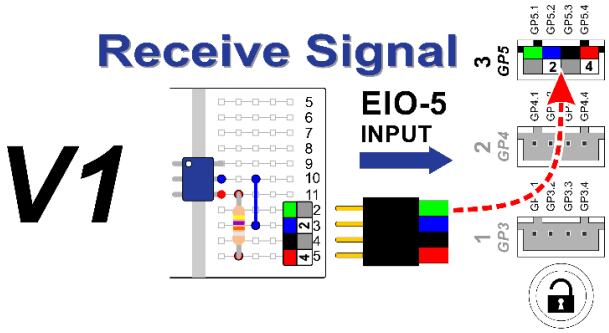

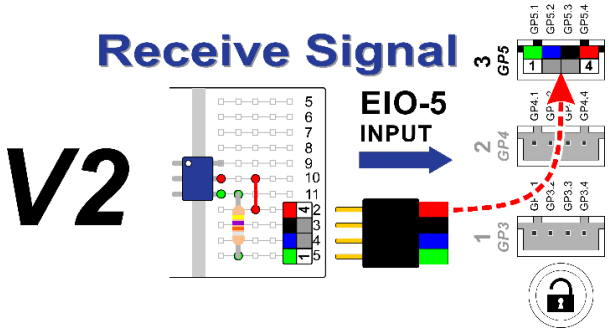

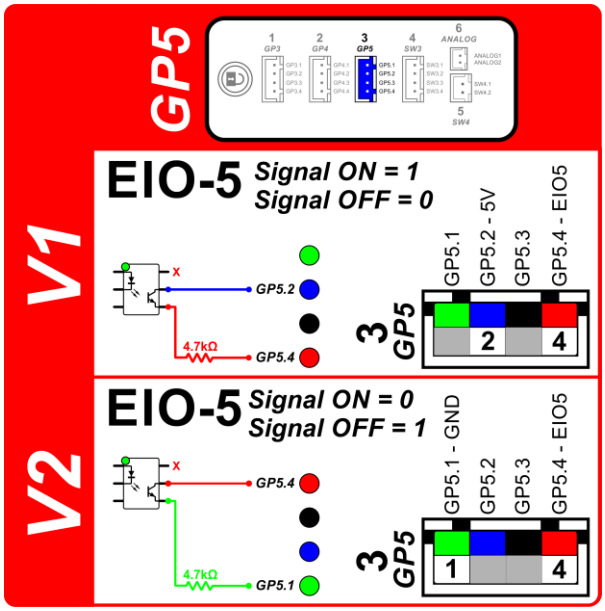

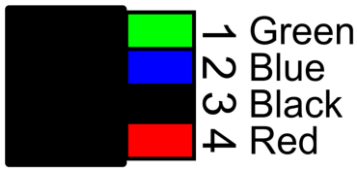

VEX Microcontroller Setup

SEND Output

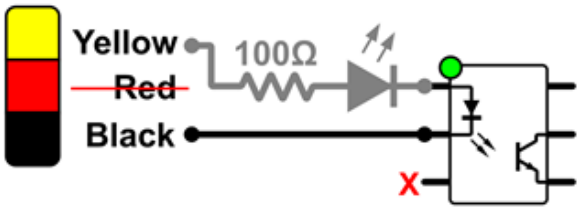

RECEIVE Input

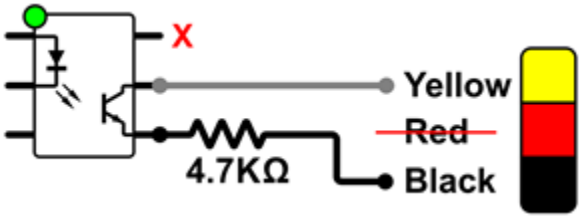

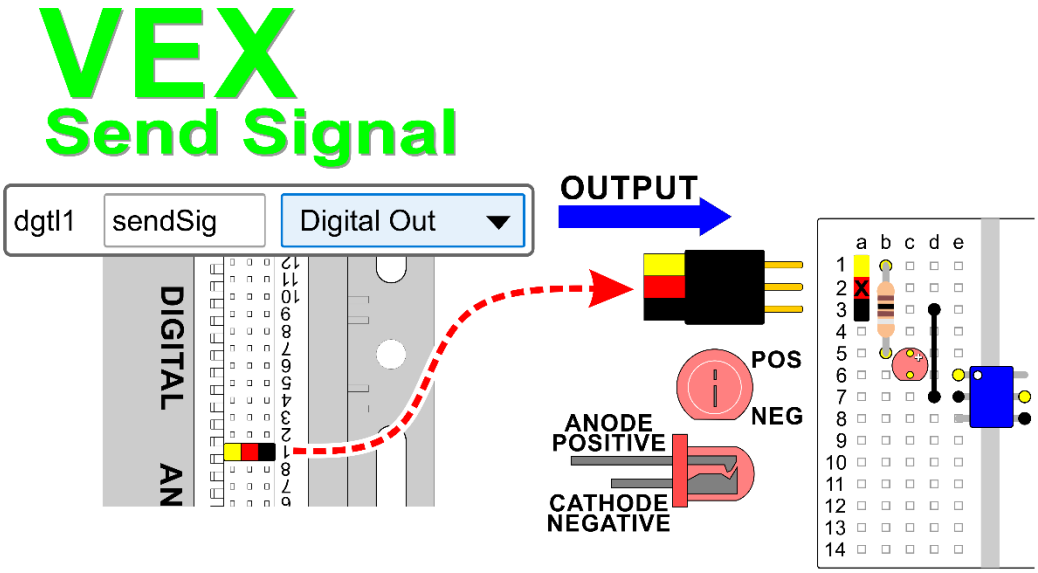

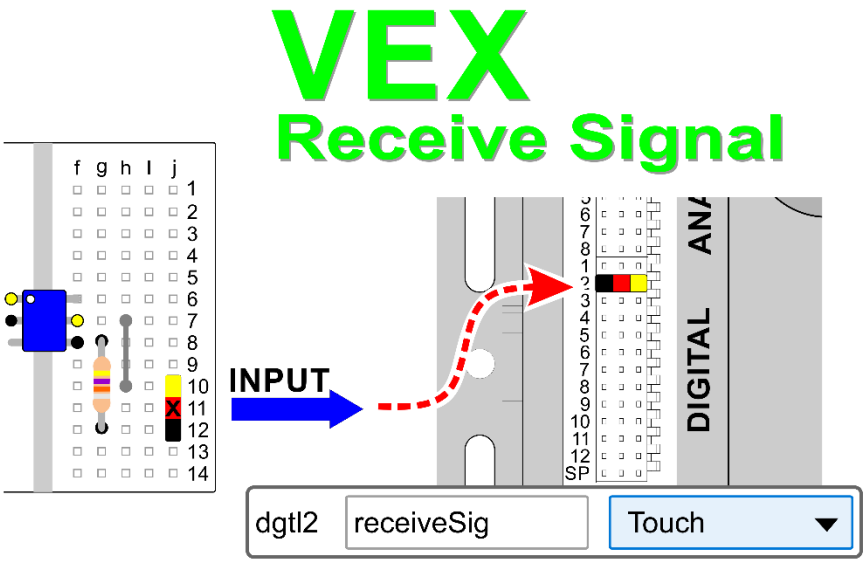

Be sure to consult the <u>Input/Output Guide</u> if you want to use other inputs and outputs, as damage to your robot or your other equipment may result.

Create a simple Grinding Station using VEX material. Use the rubber intake wheel as the grinding wheel.

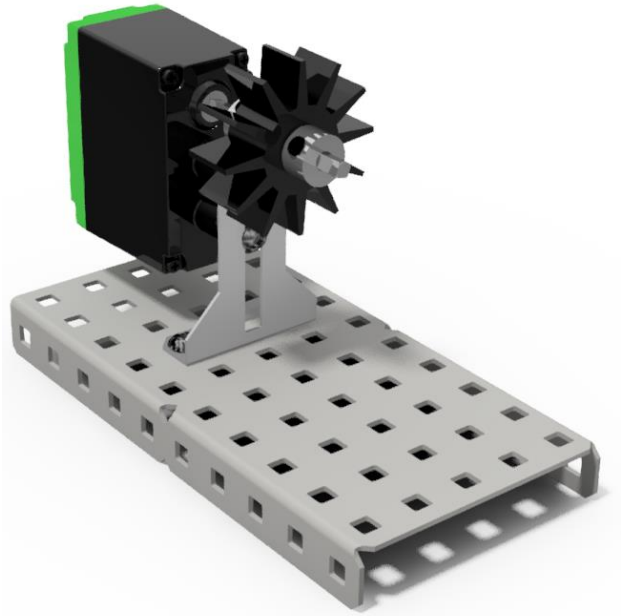

…… Where's the rest of the activity? If you need additional assistance, please refer to the previous activities. All concepts were taught, and this one was left open ended so that you may apply what you've learned.

Once the program is completed, run it and see if it works correctly. If it does not work, troubleshoot it until it does.

If your set up did not work correctly the first time, what did you have to do to make it work?

GOING BEYOND

Finished early? Try some of the actions below. When finished, show your instructor and have them initial on the line.

_____ 1. Have the robot take blocks from a matrix, machine them, and drop them off at a finished location (*example:* dropped into a bin).

_____ 2. Make another machine out of VEX parts and make the robot perform two operations.

_____ 3. Have the robot pick them up when a switch is hit, and then palletize them after grinding.